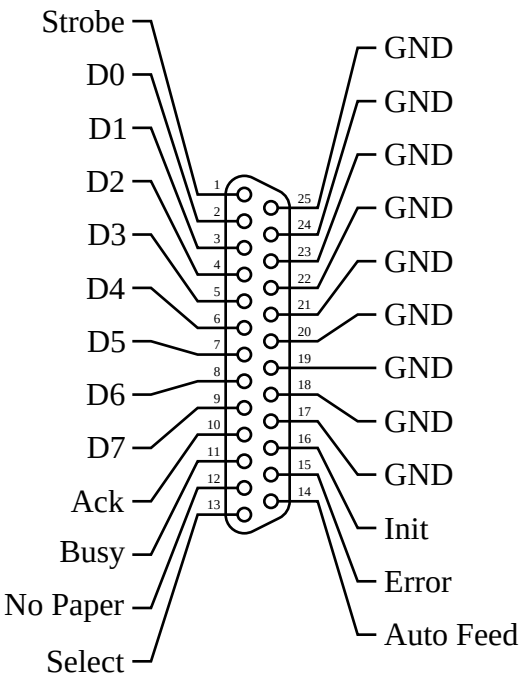

a. Parallel Port

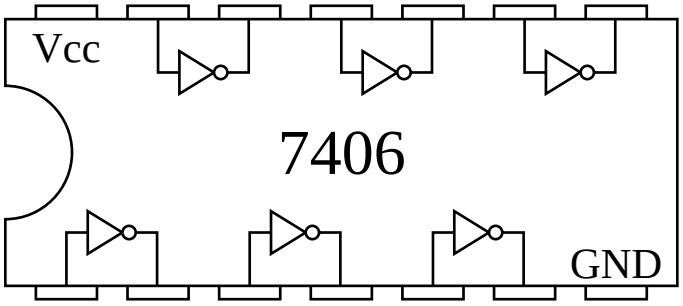

c. Glue-Logic Pinouts

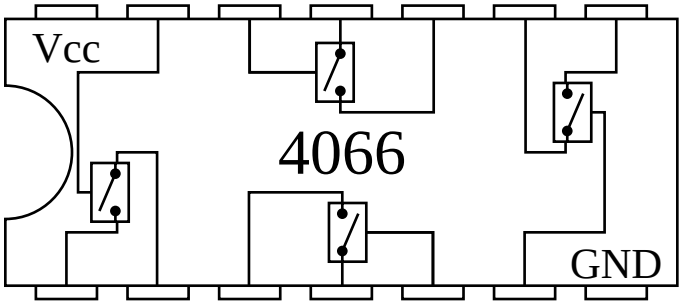

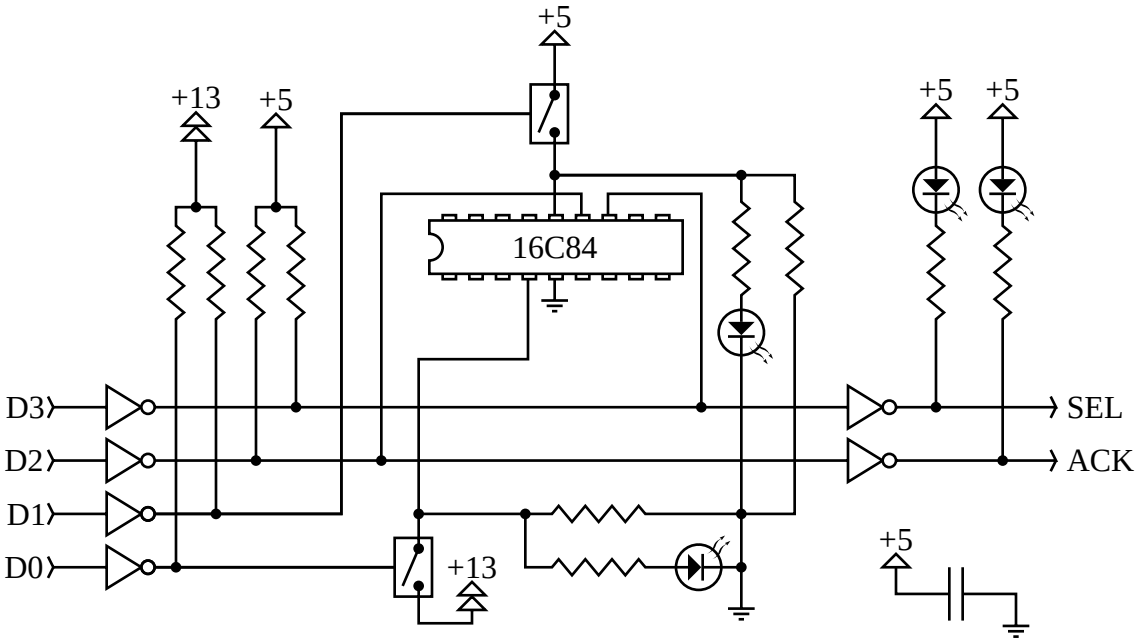

b. Simple Programmer